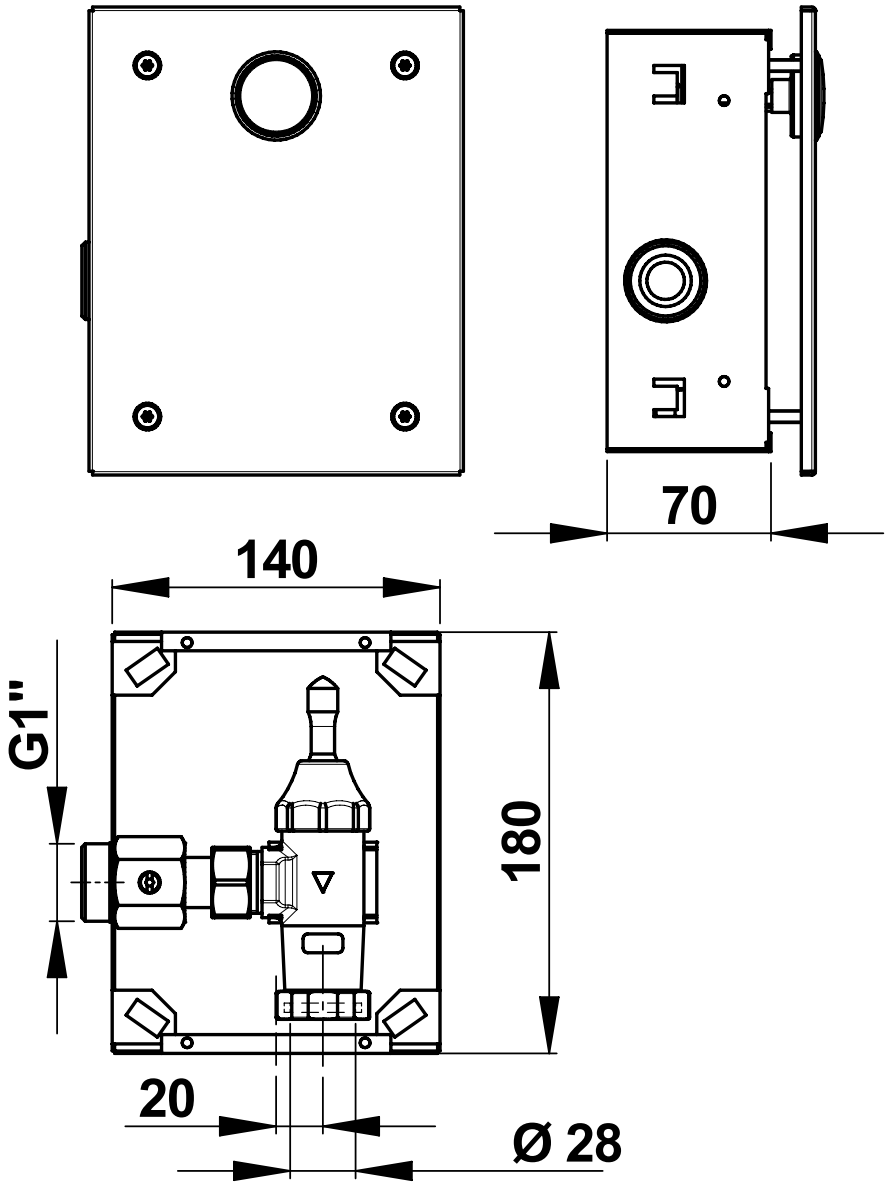
70
140
G1"
180
20
Ø 28